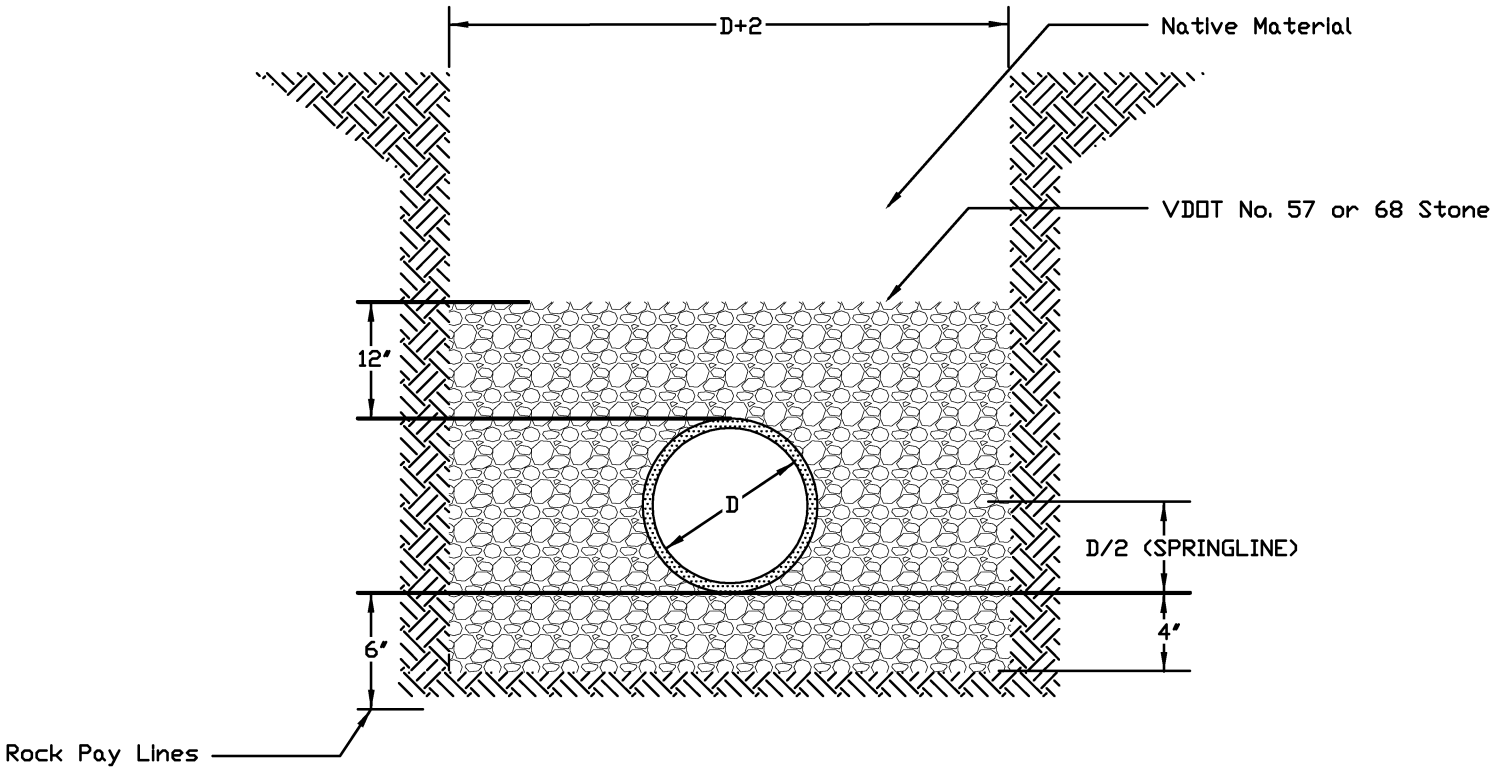

BACKFILL SHALL BE PLACED IN 6" LAYERS FROM THE BOTTOM OF THE TRENCH TO A POINT AT LEAST 6" ABOVE THE PIPE AND THOROUGHLY TAMPED BY HAND OR PNEUMATIC TAMPER, HOWEVER DO NOT TAMP DIRECTLY OVER THE PIPE

FINAL BACKFILL MAY BE PLACED IN LAYER THICKNESSES WHICH WILL PERMIT COMPACTION TO A DENSITY OF AT LEAST 95%

REINFORCED CONCRETE AND DUCTILE IRON PIPE SHALL BE BACKFILLED W/57 OR 68 TO SPRINGLINE ONLY

CITY OF STAUNTON, VA	**SEWER PIPE INSTALLATION**	Draw No. **S-8**